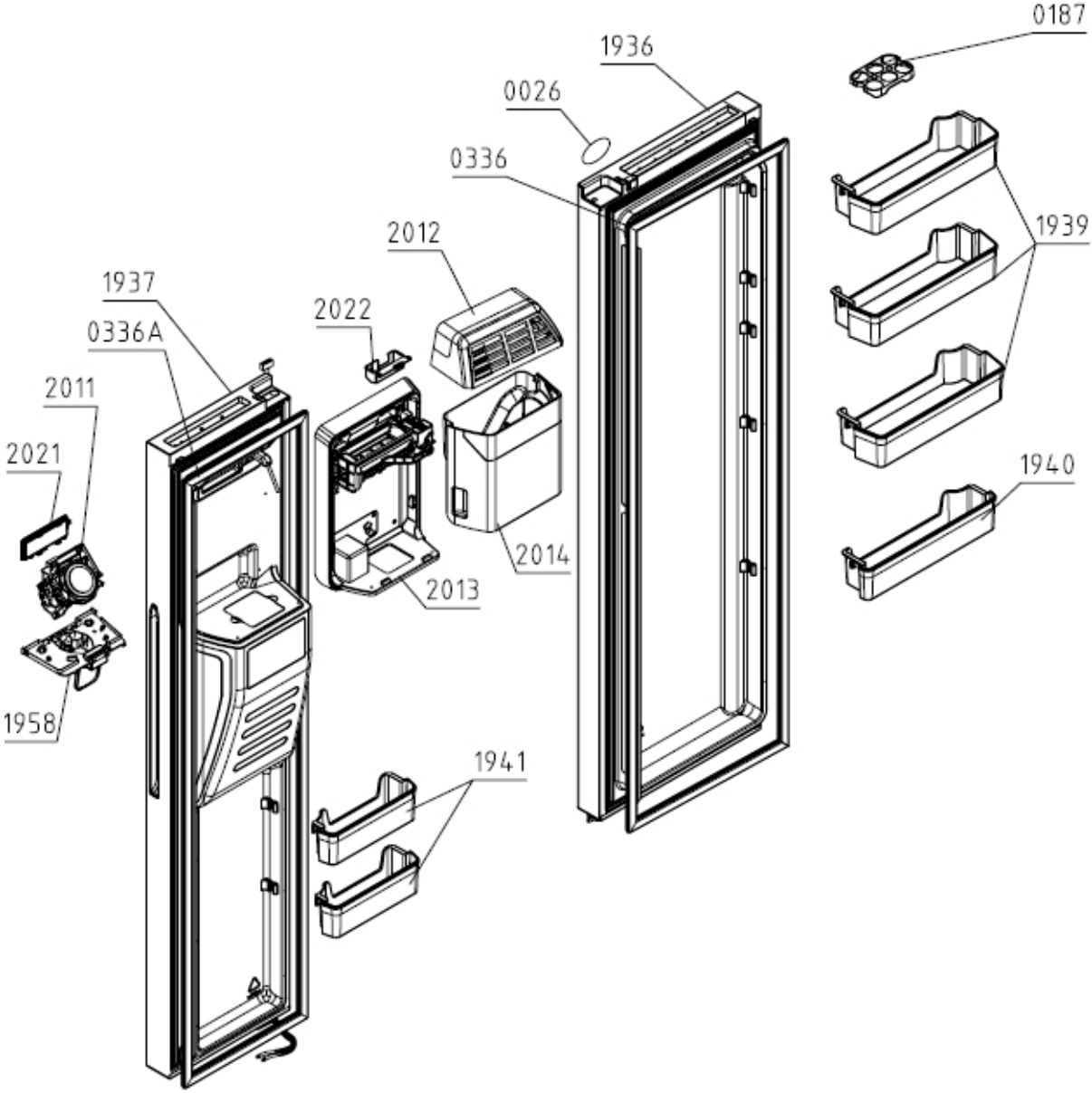
0187
1936
0026
0336
1939
2012
1937
2022
0336A
2011
2021
1940
2014
2013
1958
1941

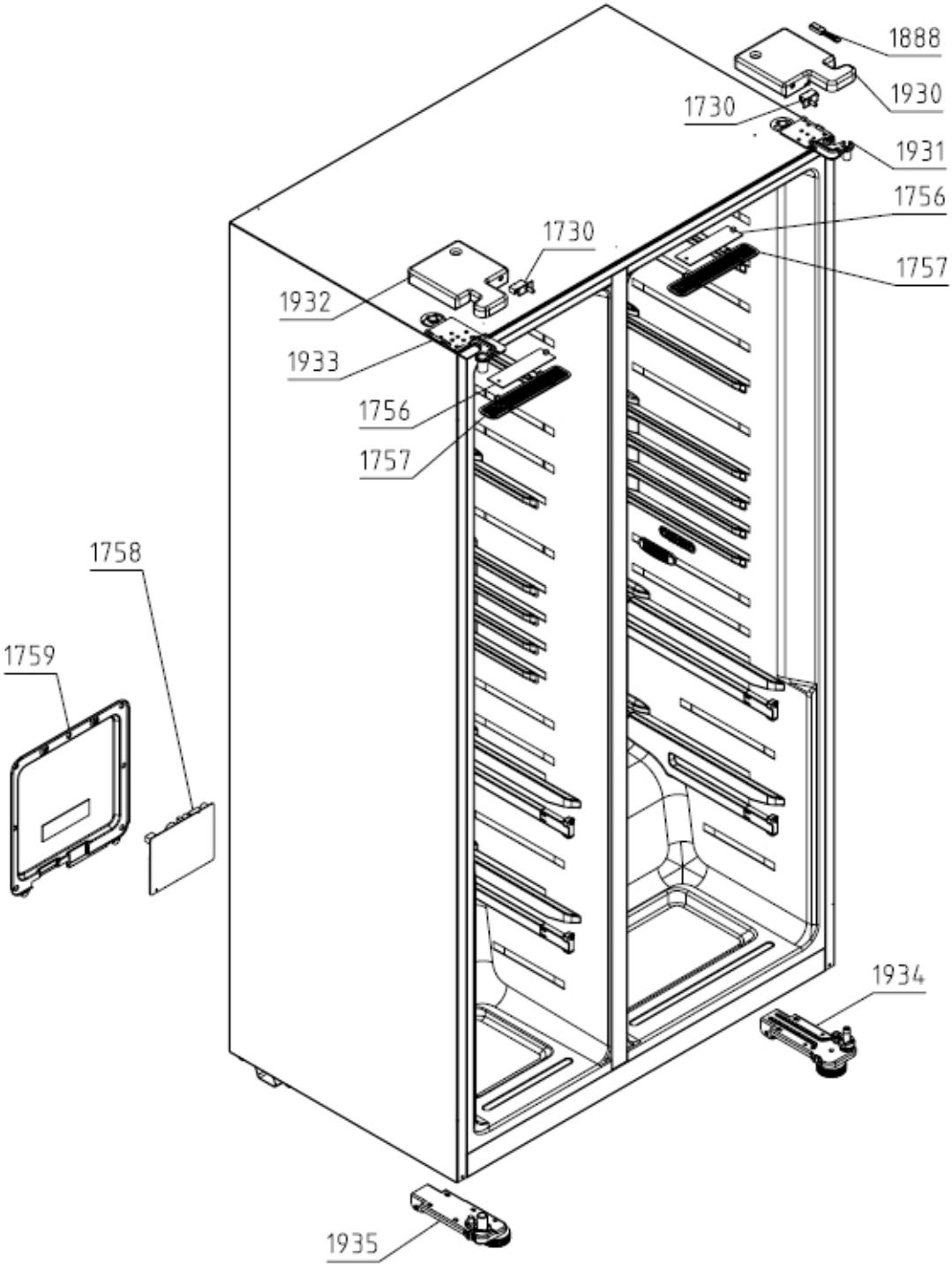
1888
1930
1730
1931
1756
1730
1757
1932
1933
1756
1757
1758
1759
1934
1935

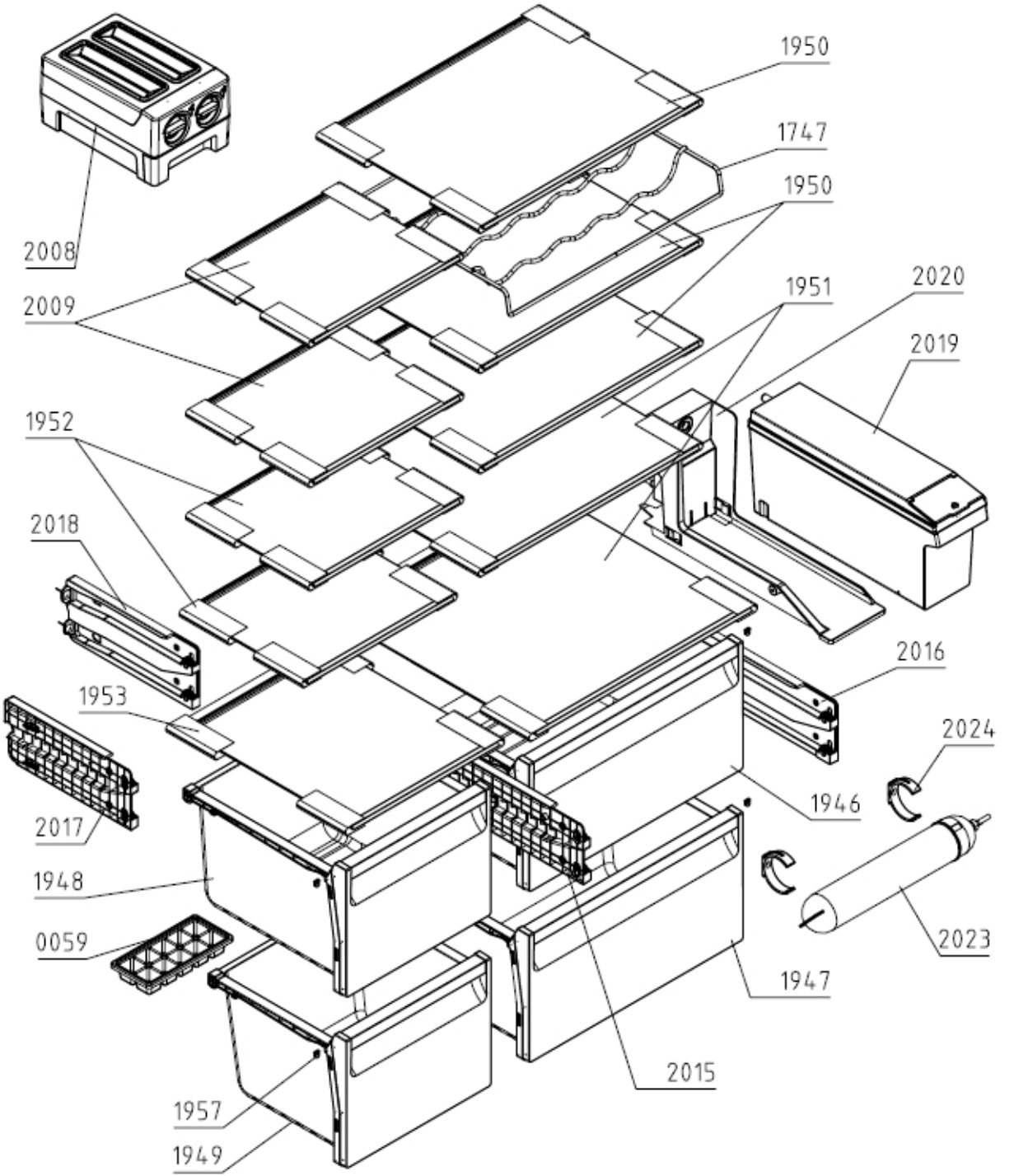
1950
1747
1950
2008
2009
1951
2020
2019
1952
2018
2016
1953
2024
2017
1946
1948
0059
2023
1947
2015
1957
1949

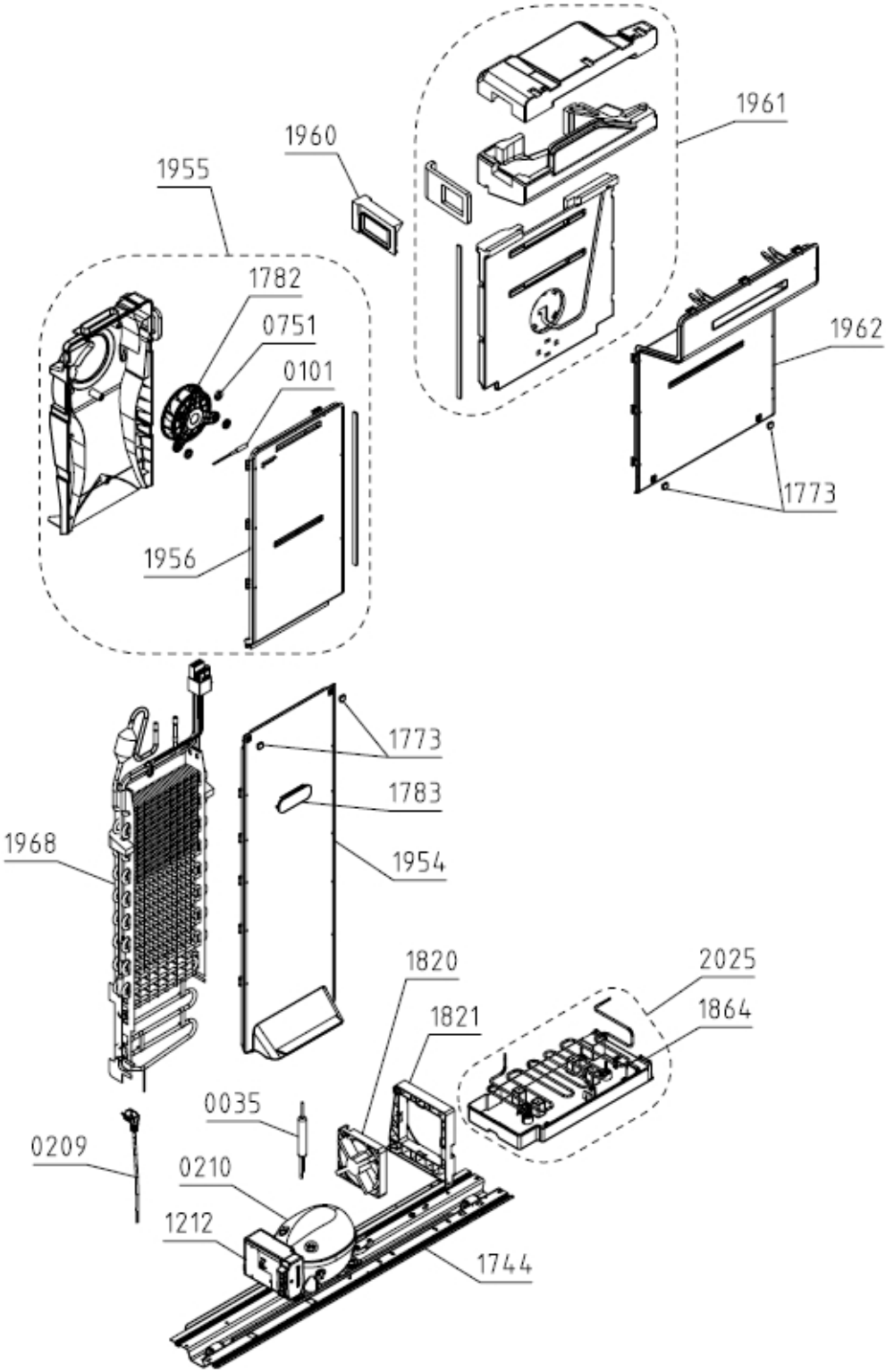
1961
1960
1955
1782
0751
0101
1962
1773
1956
1773
1783
1968
1954
1820
2025
1821
1864
0035
0209
0210
1212
1744